2 ROW INSTALL SHOWN

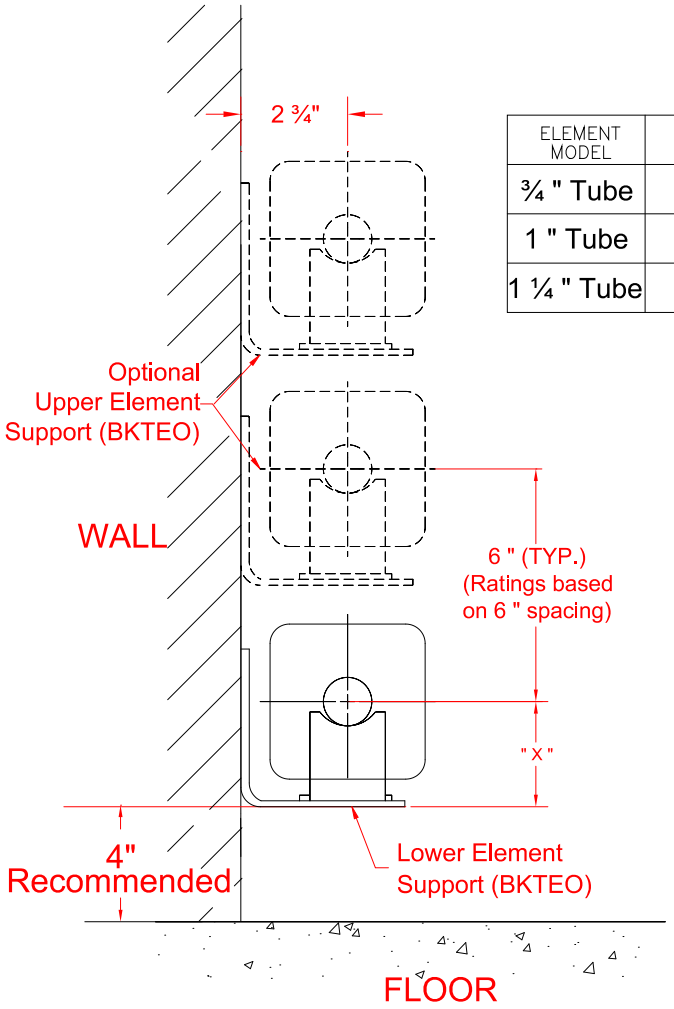

ELEMENT MODEL	DIM. X
¾ " Tube	2 ¾ "
1 " Tube	3"
1 ¼ " Tube	3"

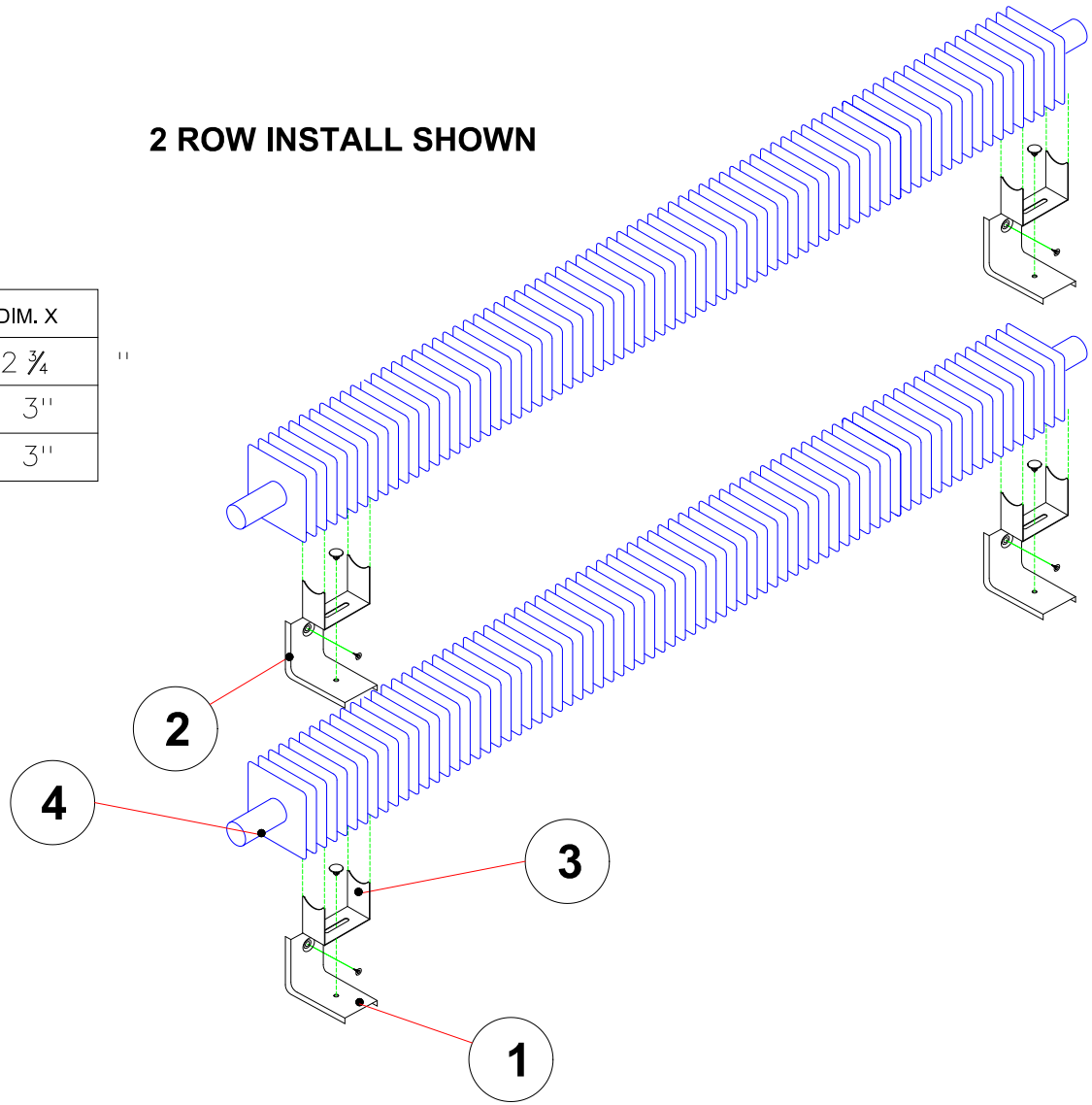

① Mount BKTEO brackets at required height above floor.
② For 2 or more tier elements, mount and fasten BKTEO brackets at required spacing above previous bracket.
③ Install cradles onto brackets by placing cradle on bracket and insert the plastic fastener through the slot in the cradle into the hole in the bracket.
④ Install heating element onto BKTEO brackets. Ensure tubing rests on cradle.